PRODUCT SPECIFICATION

DOCUMENT NO.				
DESCRIPTION	**DRAWN BY**	**DESIGNED BY**	**CHECKED BY**	**APPROVED BY**
MCI0603-TN Series	陳曉慧 Sharon Chen	呂幸宜 Emily Lu	林庭煒 Tim Lin	吳維政 Albert Wu

High Frequency Chip Ceramic Inductor (MCI-TN Series)

Engineering Specification

This product belongs to the 3C and industrial grade standard, not for automotive application. If customer privately uses to automotive parts and results in any consequences, INPAQ is not responsible for after-sales service, thank you!

■ FEATURES

- Particular ceramic material and coil structure provide high frequency application range up to 10GHz.
- Small size and low profile.
- Available in various sizes.
- Excellent solderability and heat resistance.

■ APPLICATIONS

RF and wireless communication, information technology equipment which includes computer, telecommunications, radar detectors, automotive electronics, cellular phones, pagers, audio equipment, PDAs, keyless remote system and low-voltage power supply modules.

■ SHAPES AND DIMENSIONS

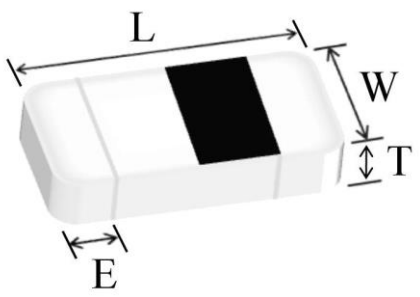

TYPE	060303 (EIA0201)
L	0.6±0.03
W	0.3±0.03
T	0.3±0.03
E	0.10~0.20
Unit	mm

■ PART NUMBER CODE

MCI	0603	TN	1N0	B	H	B	P	DG
1	2	3	4	5	6	7	8	9

1 Series Name
2 Dimensions L*W
3 TN：material code
4 Inductance(nH)：N means Decimal point , ex：1.0 nH = 1N0
5 Tolerance : B = ±0.1nH，C = ±0.2nH，H = ±3%，J = ±5%
6 Mark：H = 1/8 Mark，M = 1/4 Mark，N = No Mark
7 Soldering : Green Parts，B= Lead-Free for whole chip
8 Packaging : P = Paper tape, 7" reel
9 INPAQ internal code

■ GENERAL TECHNICAL DATA

Operating temperature range: - 55℃~ +125℃
Storage Condition: Less than 40℃ and 70% RH
Storage Time: 6 months Max.
Soldering method: Reflow

■ TEST INSTRUMENTS CONDITIONS

Agilent E4991A RF Impedance Material Analyzer or equivalent
with fixture 16197A or equivalent
(The residual inductance needs to be compensated: 0.48nH)
Agilent 4338B Milliohm meter
Test Level：500 mV

■ PART NUMBER AND CHARACTERISTICS TABLE

Part No.	Inductance (nH)	Inductance Tolerance	Q (Min.)	Freq. (MHz)	DCR(Ω) Max.	S.R.F (MHz) Min.	Rated Current (mA) Max.
MCI0603TN1N0BHBPDG	1.0	±0.1nH	14	500	0.10	17,000	750

** For special part number which is not shown in the above table, please refer to appendix.

■ TAPE AND REEL SPECIFICATIONS

➢ Tape Dimension / 8mm

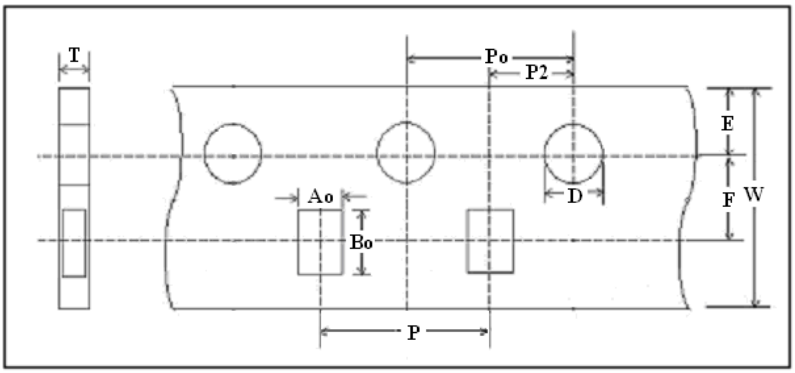

➢ Taping Dimension

(mm)	**0603**
Symbol	PAPER
W	8.00 ± 0.30
P	2.00 ± 0.10
E	1.75 ± 0.05
F	3.50 ± 0.05
D	1.50 ~ 1.60
Po	4.00 ± 0.10
P2	2.00 ± 0.05
Ao	0.36 ± 0.02
Bo	0.66 ± 0.02
T	0.42 ± 0.02

■ REEL DIMENSION

Unit：mm

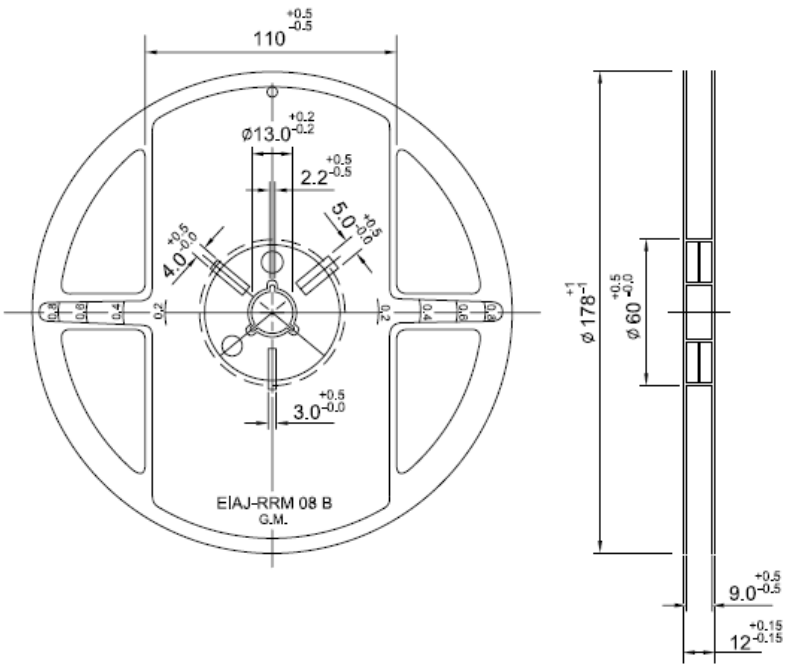

7” Reel Packaging Quantity	
PART SIZE (EIA SIZE)	**0603** **(0201)**
Qty.(pcs)	15,000
BOX	5 reels / inner box

■ RECOMMENDED SOLDERING CONDITIONS

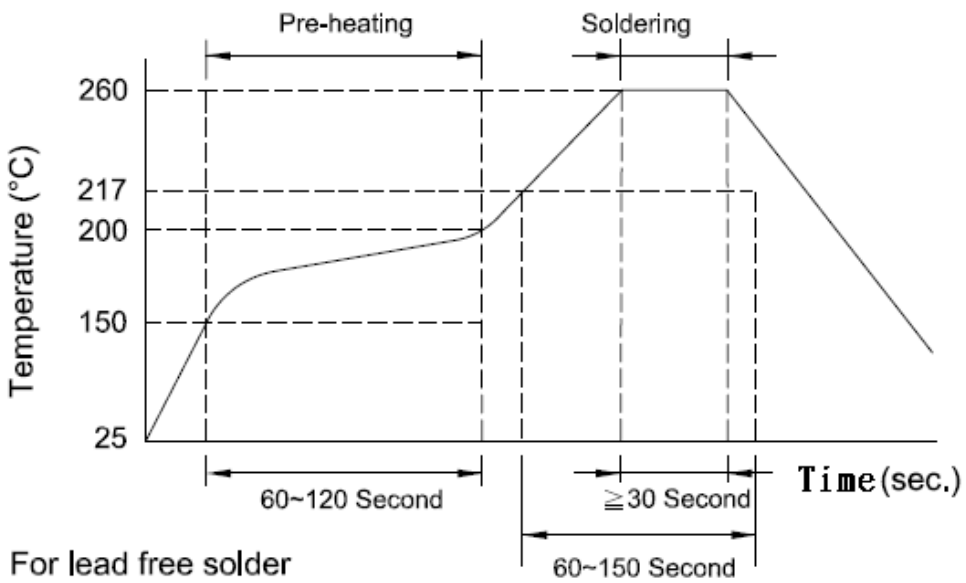

■ LAND PATTERNS REFLOW SOLDERING

Solder land information：

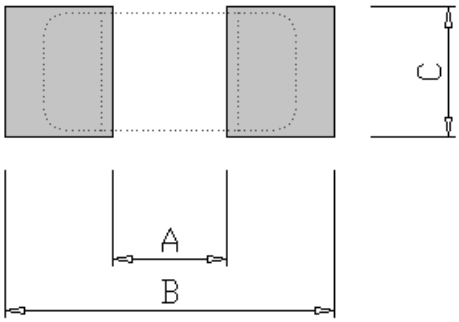

Size(mm)	A	B	C
0603 (EIA 0201)	0.20 ～ 0.30 (0.008 ～ 0.012)	0.80 ～ 0.90 (0.031 ～ 0.035)	0.20 ～ 0.30 (0.008 ～ 0.012)

■ RELIABILITY AND TEST CONDITION

Item	Test Condition	Requirements
Temperature Cycle	1. Temperature : -55 ~ +125℃ 2. Cycle : 100 cycles 3. Dwell time : 30minutes 4. Measurement : at ambient temperature 24 hrs after test completion	1. No mechanical damage 2. Inductance value should be within ± 10 % of the initial value 3. Q vale should be within ± 20% of the initial value
Operational Life	1. Temperature: 85 ± 5℃ 2. Testing time: 1000 hrs 3. Applied current: Full rated current 4. Measurement: At ambient temperature 24 hours after test completion	1. No mechanical damage 2. Inductance value should be within ± 10 % of the initial value 3. Q vale should be within ± 20% of the initial value

Item	Test Condition	Requirements
Biased Humidity	1. Temperature : 40℃ ± 2℃ 2. Humidity : 90 ~ 95 % RH 3. Test time : 1000 hrs 4. Apply current : full rated current 5. Measurement : at ambient temperature 24 hrs after test completion	1. No mechanical damage 2. Inductance value should be within ± 10 % of the initial value 3. Q vale should be within ± 20% of the initial value
Resistance to Solder Heat	1. Solder temperature : 260 ± 5℃ 2. Flux : Rosin 3. DIP time : 10 ± 1 sec	1. More than 95 % of terminal electrode should be covered with new solder 2. Inductance value should be within ± 10 % of the initial value 3. Q vale should be within ± 20% of the initial value
Solderability	1. Solder temperature : 235 ± 5℃ 2. Flux : Rosin 3. DIP time : 5 ± 1 sec	1. More than 95 % of terminal electrode should be covered with new solder 2. No mechanical damage
Bending Strength	1. Solder the chip to test jig then apply a force in the direction shown in below. 2. The soldering shall be done with the reflow method and shall be conducted with care so that the soldering is uniform and free of defects such as heat shock. 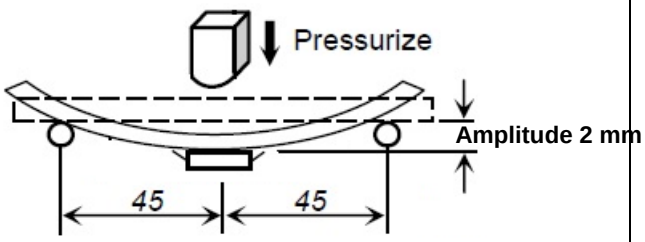	No mechanical damage

■ NOTE

The storage atmosphere must be free of gas containing sulfur and chlorine. Also, avoid exposing the product to saline moisture. If the product is exposed to such atmospheres, the terminals will oxidize and solderability will be affected.